# Leak Test A

PROPORTION-AIR

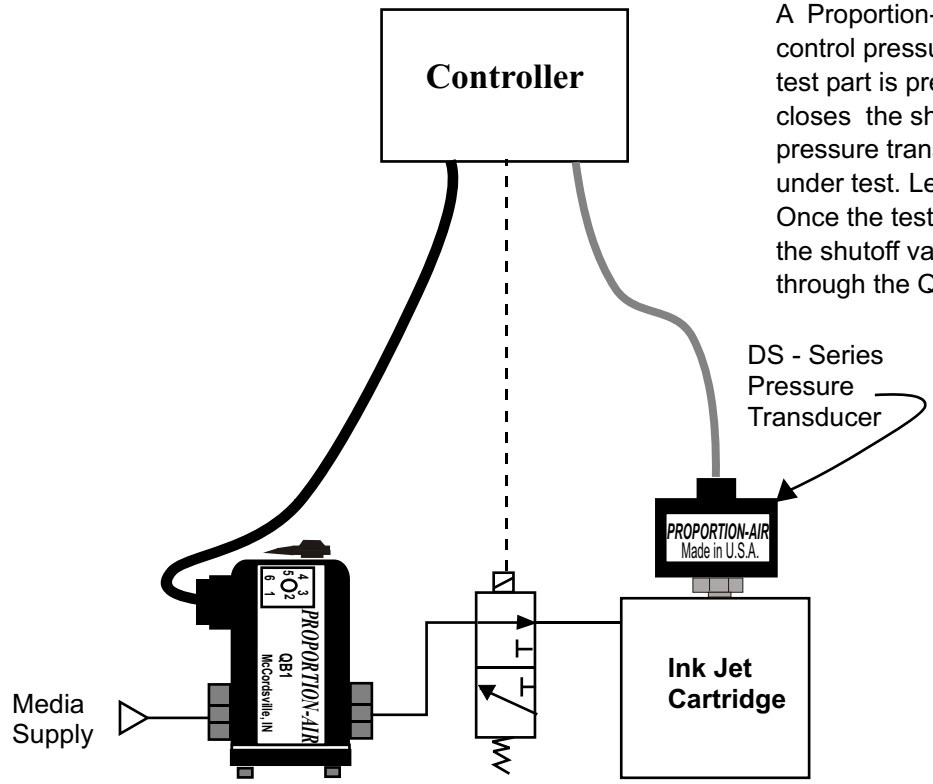


A Proportion-Air control valve can precisely control pressure to leak test parts. Once the test part is pressurized by the QB, the controller closes the shutoff valve. The DS-Series pressure transducer senses pressure in the part under test. Leak decay is recorded by the controller. Once the test is completed, the controller opens the shutoff valve and pressure is relieved through the QB.

*Circuits and design information are offered only as suggestions and are furnished free of charge. This company and its agents assume no liability for the safe and/or satisfactory operation of machines or systems designed from this information*

# Leak Test B

PROPORTION-AIR

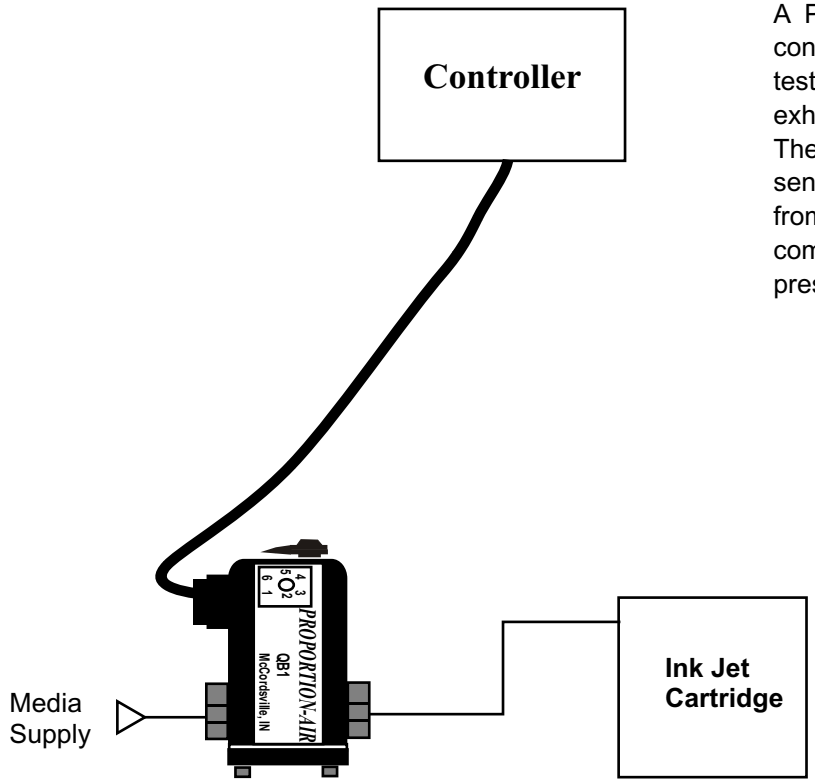


A Proportion-Air control valve can precisely control pressure to leak test parts. Once the test part is pressurized by the QB, the inlet and exhaust valves are disabled by a signal on pin 3. The QB measures the leak decay with its internal sensor. Leak decay is recorded by the controller from the analog monitor signal. Once the test is completed,
pressure is relieved through the QB.

***Drawing DP0519A***

BRQB041406E

DESIGN * ENGINEERING * MANUFACTURING * SALES  PRESSURE * FLOW * FORCE * TENSION * POSITION * TORQUE * VACUUM

# PROPORTION-AIR

THE FUTURE OF CONTROL™

QBS-Series


# QB1 & QB2

## ELECTRO-PNEUMATIC CONTROL VALVES

* Precise Closed Loop Control
* Accuracy +/-0.2 to 0.5% F.S.
* QBT Series Pressure Ranges from Vacuum to 300 psig (21 bar)
* QBS Series Pressure Ranges from Vacuum to 500 psig (34 bar)
* QBS Series has an Internal Stainless Steel Sensor & Avaliable with Aluminum or Stainless Steel Manifold

Actual size QB2T shown with optional digital display

Let's Talk 317-335-2602  P.O. Box 218, McCordsville, Indiana 46055  www.proportionair.com

## THE INSIDE STORY OF THE QBT:

Access hole allows adjustments in the field. Easy tuning of Zero & Span calibration potentiometers

Available in a wide range of electrical control input and analog output

IP65 enclosure allows it to withstand the elements and be washed down without harm

- Ships with required filtration

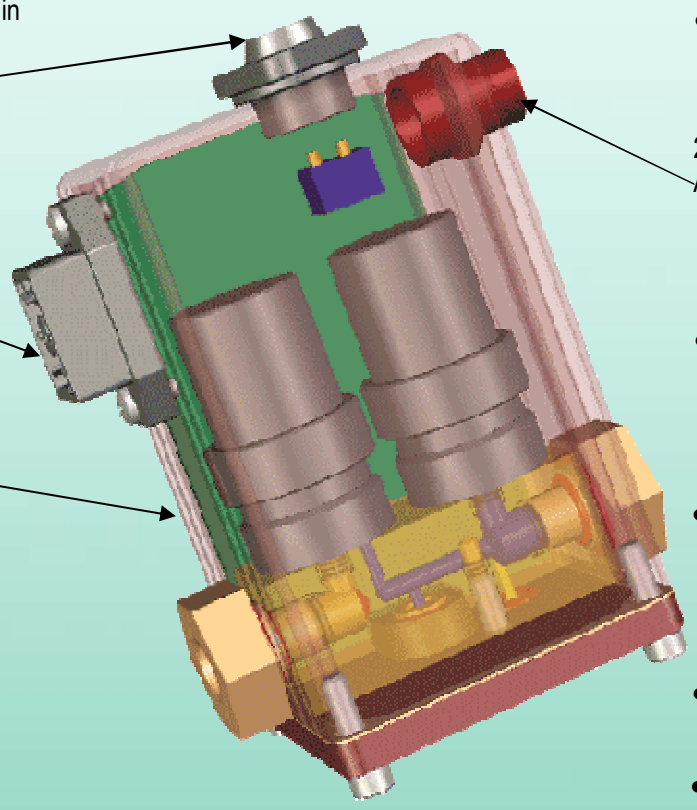

- Precision pressure control vacuum to 300 psi (21 bar)

2nd loop input, QB2T valves only Auxiliary connector (S305 option)

- Non-air consuming in steady state which reduces cost of manufacturing
- Can be mounted directly on the machine in any orientation
- Unaffected by shock or vibration
- Unaffected by supply pressure change

## DIMENSIONS QBT

DIMENSIONS ARE FOR REFERENCE USE ONLY

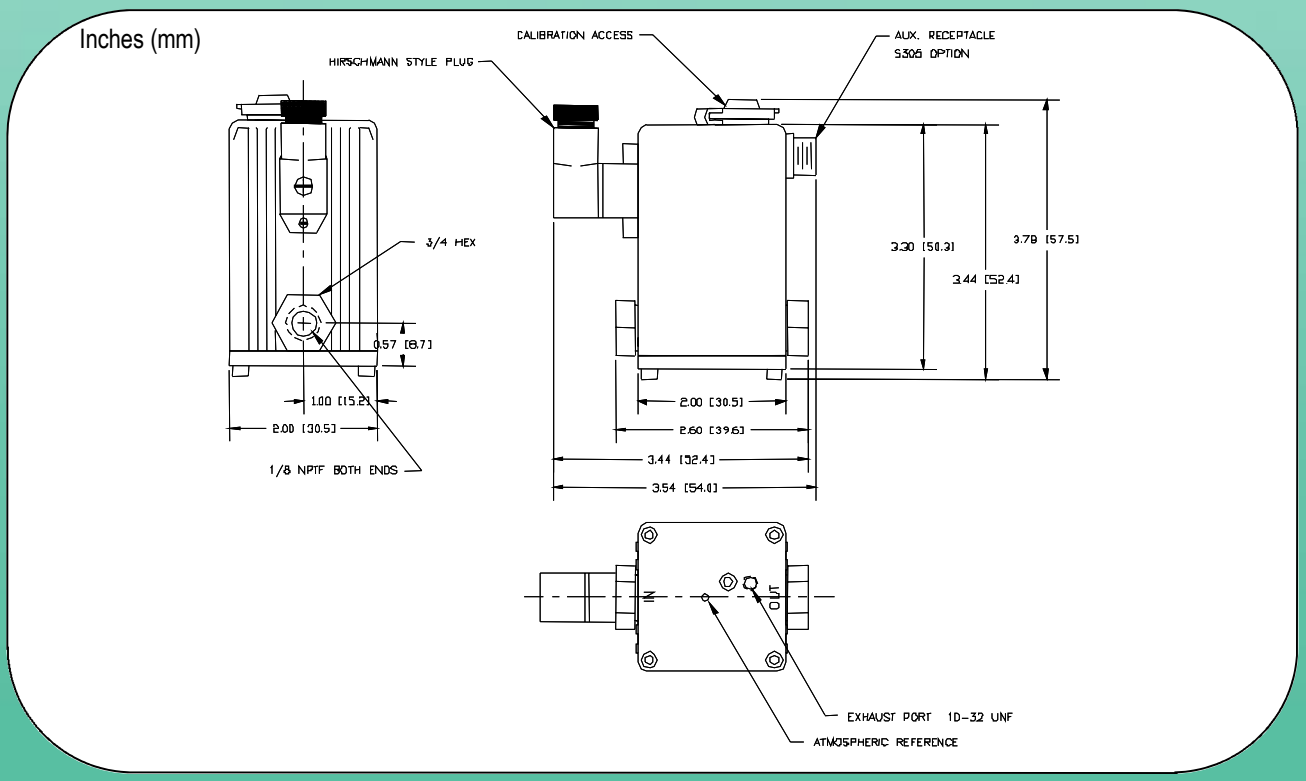

## THE INSIDE STORY OF THE QBS:

- Precision pressure control vacuum to 500 psi (35 bar)

Available in a wide range of electrical control input and analog output

Internal stainless steel pressure sensor, that utilizes dry technology instead of liquid fill, is used for increased reliability and media compataiblity

QBS available in anodized aluminum or stainless steel manifold which enhances media compatibility

- Two outlet ports which allows flexibility in mounting options.

- Ships with required filtration

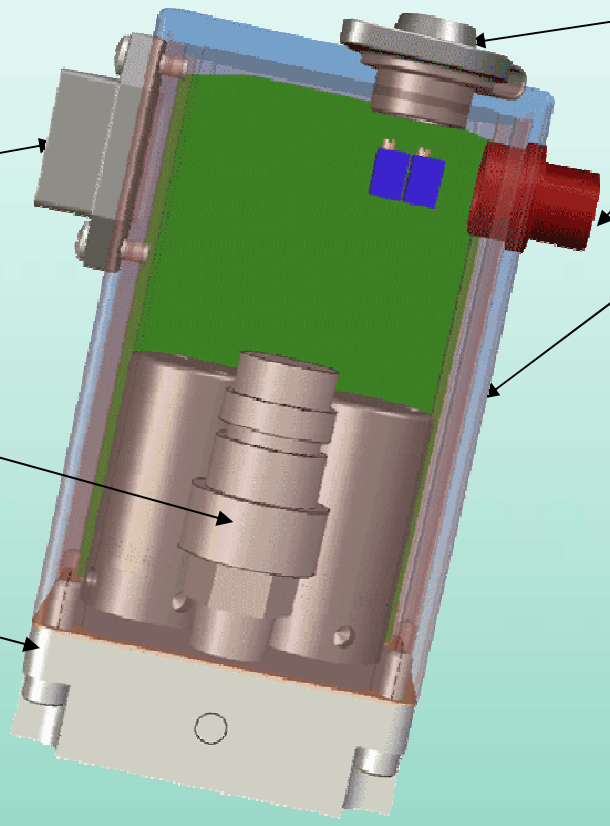

Access hole allows adjustments in the field. Easy tuning of Zero & Span calibration potentiometers

2nd loop input, QB2S valves only Auxiliary connector (S305)

IP65 enclosure allows it to withstand the elements and be washed down without harm

- Unaffected by shock or vibration

- Can be mounted directly on the machine in any orientation

- Non-air consuming in steady state which reduces cost of manufacturing

- Unaffected by supply pressure change

## DIMENSIONS QBS

DIMENSIONS ARE FOR REFERENCE USE ONLY

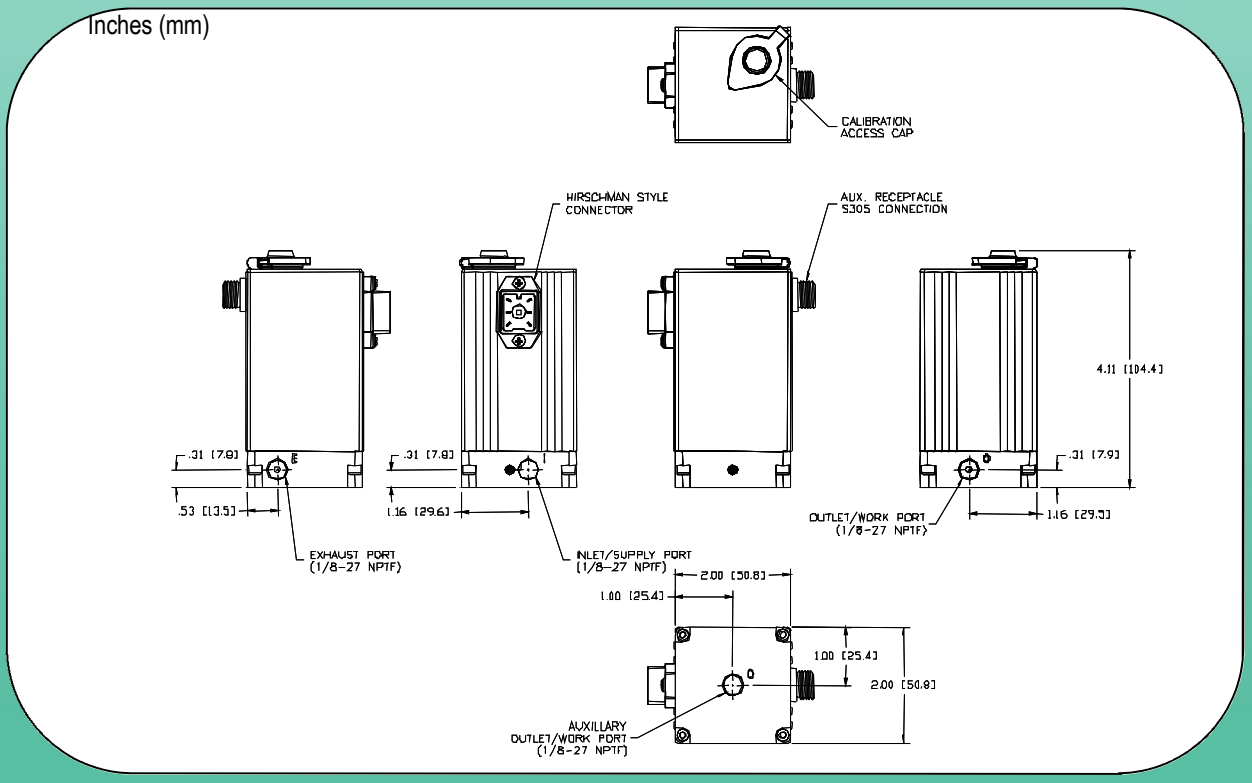

## FUNCTIONAL DESCRIPTION

The QB Series uses Proportion-Air's patented technology for closed loop control. The QB Series valves can be built in either a single loop or double loop control scheme.

The QBT Series is used to control pressure of inert gases from full vacuum up to 300 psig (21 bar).

The QBS is used in applications where the maximum calibrated pressure ranges are between 300 and 500 psig (34 bar). The QBS Series can also be used in applications where the pressure ranges are below 300 psig (21 bar) if the wetted parts on the QBS are compatible with the media being controlled. The QBS Series uses a solid one piece manifold for added strength, available in anodized aluminum or stainless steel. There are two outlet ports which allows flexibility in mounting options. In all QBS models, a stainless steel pressure sensor that utilizes dry technology instead of liquid fill, is used internally for increased reliability and enhanced media compatibility.

### THEORY OF OPERATION

The QB1 is a single loop model consisting of valves, manifold, internal pressure transducer, and electronic controls. Output pressure is proportional to an electrical signal input. Pressure is controlled by two solenoid valves. One valve functions as the inlet control, the other as exhaust. The pressure output is measured by a pressure transducer internal to the QB1 and provides a feedback signal to the electronic controls. This feedback signal is compared against the command signal input. A difference between the two signals causes one of the solenoid valves to open allowing flow in or out of the system. Accurate pressure is maintained by controlling these two valves.

The QB2 is similar to the QB1 but uses a double loop control scheme. In addition to the internal pressure transducer, the QB2 also receives a feedback signal from an external sensing device. The external signal functions as the primary feedback signal which is compared against the command signal input. This outer loop comparison is then used to provide a command to the inner loop. A difference between the two comparisons causes one of the solenoid valves to open allowing flow in or out of the system.

Since the external feedback signal is electrical, control is not limited to pressure. Using other types of sensors allows control over parameters such as force, position, flow, etc. Usually in these applications the QB2 valve functions as pilot to a slave regulator controlling the end result. With a sensor providing system feedback, the package becomes a closed loop control system.

The QB control valve is specified as a stand alone valve in static applications with low flow requirements. It can also be used as a pilot to air piloted regulators (volume boosters) in applications where the flow rate of the controlled pressure is higher than QB's flow rate.

### COMMAND SIGNAL

Command inputs come in a choice of either a 0-10Vdc or 4-20mA.

### MONITOR SIGNAL

All QB's come with a 0-10 volt or an optional 4-20mA monitor signal for output to a panel meter or controller for data acquisition or quality assurance needs. On a QB1, the monitor signal represents the internal pressure transducer that is measuring the work pressure. On a QB2, the monitor signal represents the signal from the external sensor that is monitoring the output downstream.

## QB GENERAL SPECIFICATIONS & PERFORMANCE CHARACTERISTICS

| ELECTRICAL | MINIMUM | TYPICAL | MAXIMUM |
|---|---|---|---|
| Supply Voltage | 15VDC | - | 24VDC |
| Supply Current | 100mADC | - | 250mADC |
| Command Signal | | | |
| Voltage | 0VDC | - | 10VDC |
| Current | 4mADC | - | 20mADC |
| Analog Monitor Output | | | |
| Voltage | 0VDC | - | 10VDC |
| Current | 4mADC | - | 20mADC |
| Command Signal Impedance | | | |
| Voltage | - | 4.7 KΩ | - |
| Current | - | 100 Ω | - |

| PNEUMATIC | MINIMUM | TYPICAL | MAXIMUM |
|---|---|---|---|
| Inlet Pressure (1) | Full Vacuum | 110% of full scale calibration | 550 psig (38 bar) |
| Pressure Range (2) | Full Vacuum | - | 500 psig (34 bar) |
| Flow Rate(3) | - | 1.2 SCFM (34 l/min)@ 100 psig (6.89 bar) | - |
| Cv Capacity | - | 0.04 | - |
| Filtration Required | 40 micron (actual) | 20 micron | - |
| Accuracy | | | |
| QBT | ±0.5%F.S. | ±0.2%F.S. | ±0.1%F.S. |
| QBS | ±0.75%F.S. | ±0.5%F.S. | ±0.2%F.S. |
| Hysteresis | | | |
| QBT | ±0.1%F.S. | ±0.15%F.S. | 0.25%F.S. |
| QBS | ±0.1%F.S. | ±0.2%F.S. | ±0.5%F.S. |
| Repeatability | | | |
| QBT | ±0.05%F.S. | ±0.02%F.S. | - |
| QBS | ±0.1%F.S. | ±0.05%F.S. | - |
| Port Size (all) | - | 1/8 inch NPT Female | - |
| Critical Volume | - | 1 in³ | - |
| Wetted Parts | | | |
| QBT | Fluorocarbon, Brass, Nickle Plated Brass , Silicon, Aluminum | | |
| QBSA | Anodized Aluminum, Nickel Plated brass, 303, 316, or 17-4 Stainless Steel & Viton™ | | |
| QBSS | Viton™, 303 and 430 FR, and either 316 or 17-4 Stainless Steel | | |

| PHYSICAL | MINIMUM | TYPICAL | MAXIMUM |
|---|---|---|---|
| Operating Temperature | 32ºF (0ºC) | - | 158ºF (70ºC) |
| Environment Protection (4) | - | NEMA 4/IP65 | - |
| Weight | | | |
| QBT | - | 1.1 lbs (0.5 kg) | - |
| QBSA | - | 1.0 lbs (0.45 kg) | - |
| QBSS | - | 1.4 lbs (0.64 kg) | - |
| Electrical Connector | - | 6 pin Hirschman Connector | - |

(1) See "Inlet Pressure Rating" table on page 6.
(2) Pressure ranges are customer specified. QBT is available with maximum calibrated range of 300 psig (21 bar). QBS is available with maximum calibrated range of 500 psig (34 bar).
(3) Consult factory for higher and lower flow rates options.
(4) CE approved

# PERFORMANCE CHARACTERISTICS

## LINEARITY

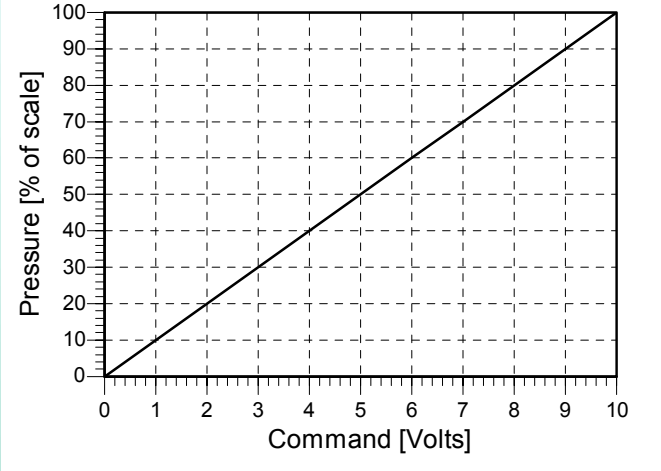


This chart shows the linear characteristics of QB products when given a ramp signal from 0-10 volts. Characteristics would be similar for 4-20 mA units.

## RESPONSE TO STEP INPUT

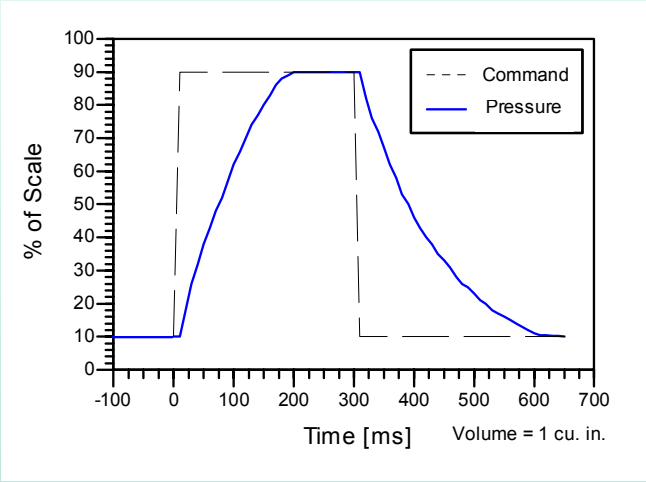


Times for QB to fill/exhaust a closed chamber. Step command signal is superimposed over pressure trace. Time is determined by the difference between command signal and pressure achieved.

## FLOW CHARACTERISTICS

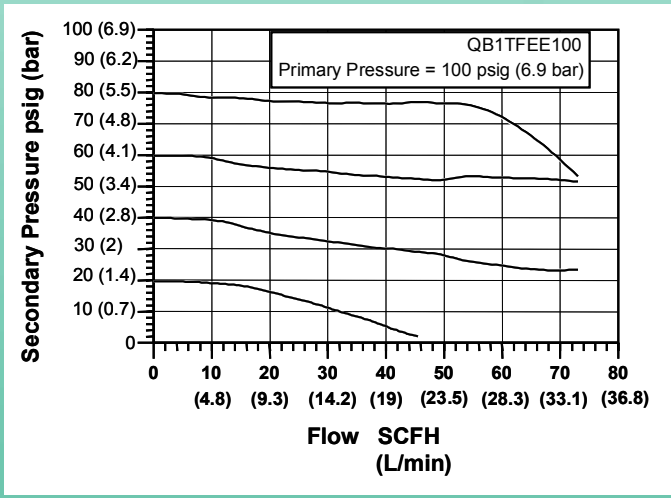


Regulating characteristics of a QB from no flow condition to full flow. To use, choose pressure setting from left end of chart at no flow conditions. Follow curve out until drop begins to occur. Read flow from bottom.

## INLET PRESSURE RATING

| For QB valve that is ordered with maximum calibrated pressure of: | Maximum inlet pressure is: |
|---|---|
| Vacuum up to 10 psig (0.7 bar) | Consult factory |
| 11 to 20 psig (0.8 to 1.4 bar) | 35 psig (2.4 bar) |
| 21 to 44 psig (1.5 to 3 bar) | 55 psig (3.8 bar) |
| 45 to 100 psig (3.1 to 6.9 bar) | 110 psig (7.6 bar) |
| 101 to 200 psig (7 to 13.8 bar) | 220 psig (15.2 bar) |
| 201 to 300 psig (13.9 to 20.7 bar) | 330 psig (22.8 bar) |
| 301 to 500 psig (20.8 to 34 bar) | 550 psig (37.9 bar) |

## ORDERING INFORMATION

**D QB 1 S A F E E 500 S133**

**D** — DIGITAL DISPLAY*
- D = Digital display
- BLANK = No display

**QB** — SERIES

**1** — MODEL
- 1 = Single Loop
- 2 = Double Loop

**S** —
- T = Standard Sensor for pressure up to 300 psig (21 bar)
- S = Stainless Steel Sensor for higher pressure up to 500 psig (34 bar)

**A** — MANIFOLD MATERIAL**
- QBT Series Manifold Option
  - Blank = Brass manifold
- QBS Series Manifold Options
  - A = 6061 Aluminum
  - S = 303 Stainless

**F** — MONITOR

**E** — COMMAND INPUT
- E = 0-10 VDC
- I = 4-20 mA

**E** — MONITOR SIGNAL
- E = 0-10VDC
- C = 4-20mA Sinking
- S = 4-20mA Sourcing

**500** — MAXIMUM CALIBRATED RANGE Vacuum –500psig***

EXAMPLES
100 = 0-100 PSI
N20 = 0-20 in-Hg (vacuum)

Consult factory for special options for pressure ranges not starting at “0” psig .

**S133** — SPECIAL OPTIONS
- Blank = No option
- S133 = Vacuum through positive pressure calibration
- S305 = Aux. Receptacle for 2nd loop input (QB2 units only)
- S972 = Calibrate 0-34 bar

Consult factory for other options

*Digital display is available on QBT Series only. It is not available on QBS Series
** Consult factory for other manifold options on the QBT Series
*** QBT available for pressure ranges up to 300 psig (21 bar). QBS is available for pressure ranges up to 500 psig (34 bar).

## ACCESSORIES

**PRE-ASSEMBLED POWER CORD**

QBT-C-6

Length in feet
(Other lengths are available from 1 to 25 feet (8 meter), in 1 foot increment)

**MOUNTING BRACKETS**

QBT-01

QBT-02

# ACCESSORIES

DIMENSIONS ARE FOR REFERENCE USE ONLY

**QBT-01 Bracket**

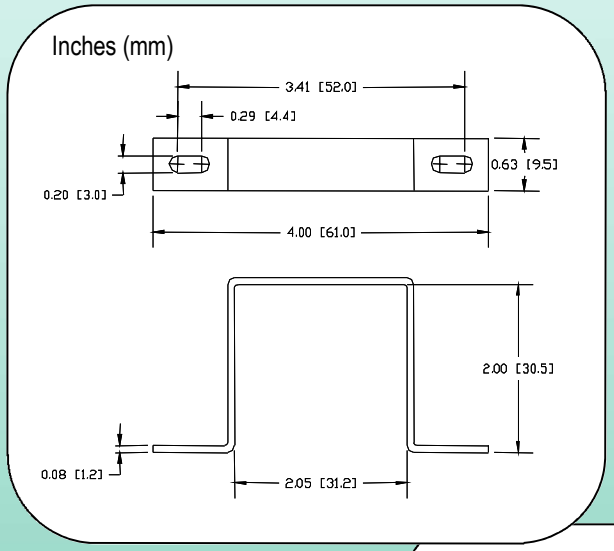


**QBT-02 Bracket**

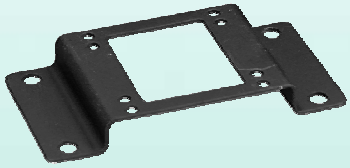

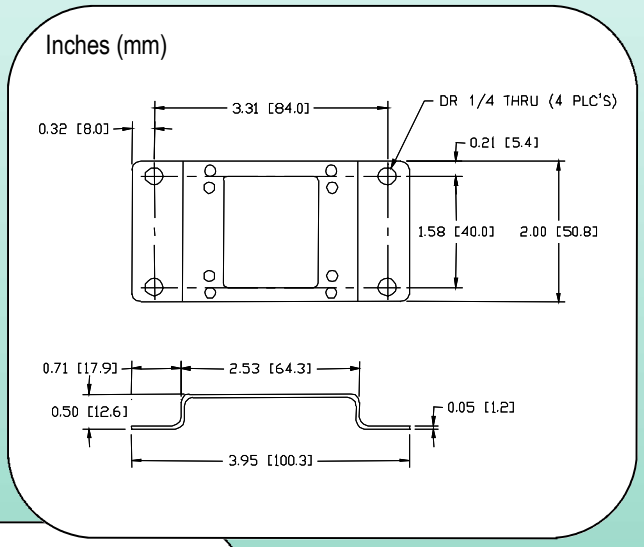


**QBT Power Cord**


*PROPORTION-AIR, INC. 8250 N. 600 West, P.O. BOX 218*
*McCORDSVILLE, INDIANA USA 46055*
*PHONE 317-335-2602 FAX 317-335-3853*
*www.proportionair.com info@proportionair.com*


## *WE MAKE ONE PRODUCT THOUSANDS OF WAYS*

Proportion-Air products are warranted to the original purchaser only against defects in material or workmanship for one (1) year from the date of manufacture. The extent of Proportion-Air's liability under this warranty is limited to repair or replacement of the defective unit at Proportion-Air's option. Proportion-Air shall have no liability under this warranty where improper installation or filtration occurred.

All specifications are subject to change without notice. **THIS WARRANTY IS GIVEN IN LIEU OF, AND BUYER HEREBY EXPRESSLY WAIVES, WARRANTIES OR LIABILITIES, EXPRESS, IMPLIED OR STATUTORY, INCLUDING WITHOUT LIMITATION ANY OBLIGATION OF PROPORTION-AIR WITH REGARD TO CONSEQUENTIAL DAMAGES, WARRANTIES OF MERCHANTABILITY, DESCRIPTION, AND FITNESS FOR A PARTICULAR PURPOSE.**

WARNING: Installation and use of this product should be under the supervision and control of properly qualified personnel in order to avoid the risk of injury or death.